Mx351i-eC

Beyond limits - Efficiency meets Innovation

With the **Mx351i-eC**, we've set a new benchmark for Print & Apply systems, specifically engineered for seamless integration into packaging lines, such as those in the life science and food industry. Utilising an electric arm, this small and versatile system efficiently labels multiple sides of a package, even wrapping around corners. It achieves this while significantly cutting energy consumption and reducing the need for compressed air - all with the added benefit of advanced connectivity options.

Easy to integrate

- With an 80% reduction in energy consumption and a 90% cut in air usage compared to average systems, the compact **Mx351i-eC** seamlessly integrates into any packaging line.
- The advanced connectivity options of the **Mx351i-eC** facilitate seamless integration with ERP, WMS, and MES systems within your factory, ensuring streamlined data flow and enhanced operational efficiency.

Easy to use

- The **Mx351i-eC** is designed for user-friendliness, featuring an integrated UI and an optional remote 10-inch touchscreen, for easy operation.
- By connecting your printer to **Domino Cloud** for real-time operational insights, you can enjoy easy access to production analytics dashboards, receive system error alerts, and streamline your operation.

Easy to adapt

- The **Mx351i-eC** is highly adaptable, giving you the flexibility to apply one or two labels on the top, front, rear, or side of a package. It even has the capability to label around corners, ensuring your packaging meets precise specifications.
- With innovative settings and options, this system is ideal for a wide range of applications, allowing you to easily adjust to different labelling requirements as your production needs evolve.

www.domino.se

Domino. Do more.

A complete solution for all labelling needs

Our services are designed to provide operational insight so you can reduce downtime and maximise production efficiency

Operational support

Our extended warranty packages provide high-quality, on-site assistance and augmented reality-enabled remote guidance from our engineers. **SafeGuard** helps to ensure we can be with you when you need us most.

Automatic code inspection

Ensure every code that leaves your factory is present and correct, and free up operator time. With **R-Series**, Domino's range of vision control systems, you can automate your code inspection to validate code presence, placement, and readability.

Central label management

Domino Automation easily integrates into your manufacturing process as well as your ERP/MES systems. It makes automatic changeovers safe and simple, helping you to reduce waste and drive sustainability initiatives while increasing productivity and efficiency.

Smart production

Gain operational insight by connecting your printer to **Domino Cloud**. Obtain production analytics dashboards and receive system error alerts. **Domino Cloud** provides you with the information you need to run your operations more efficiently.

With an integrated multi-language touchscreen on the printer, you can easily access the most commonly used settings.

An optional 10-inch remote touchscreen simplifies daily operations, making them more efficient.

Technical specification **Mx351i-eC**

Model	Mx351i-eC.D4
Print width	4-inch (108mm)
Print technology	Thermal transfer / Direct thermal
Print resolution	12 dots/mm (300dpi)
Printer variants	Left hand or Right hand
Max print speed	400mm/s
Distance to product	200mm
Product motion	Stationary
Apply method	Wipe by electric arm
Label position(s)	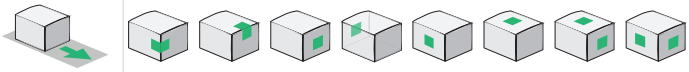
Recommended label width	25-110mm
Recommended label length	50-254mm
Label & ribbon roll length	Up to 600m
Input voltage	90-250VAC 50/60Hz
Communication	4x Ethernet, TCP/IP, 2x USB-A, 1x USB-B
I/Os (configurable)	12 inputs and 12 outputs
TouchPanel 6 (optional UI)	10.1-inch touchscreen Multi-language support ✓

Dimensions

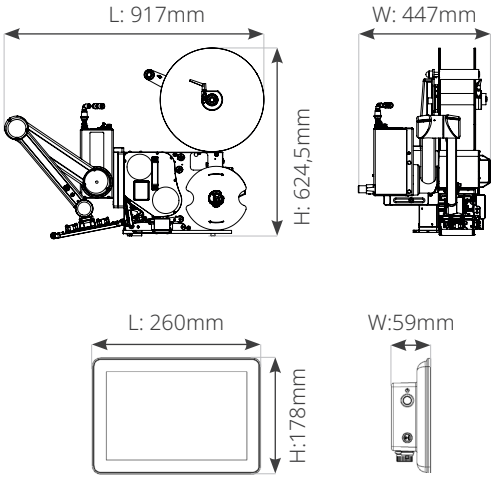

TALK TO AN EXPERT

+46 13 357 200

info@domino.se

www.domino.se

All performance related figures and claims quoted in this document were obtained under specific conditions and may only be replicated under similar conditions. For specific product details, you should contact your Domino Sales Advisor. This document does not form part of any terms and conditions between you and Domino.