Mx350i-DW

Compact, airless and cost-effective labelling

The smallest labelling solution in the **Mx-Series** range, the **Mx350i-DW** offers a direct-wipe system for simple labelling requirements. It provides fast and accurate labelling on moving products or packages without requiring any compressed air. It is a cost-efficient model, yet it maintains the same overall clean design and flexibility that the Domino print and apply range is well known for.

Easy to integrate

- Advanced connectivity options enable effortless integration with ERP, WMS, and MES systems within your factory, for smooth operation and enhanced productivity.
- With one of the most flexible and streamlined designs on the market, the **Mx350i-DW** print and apply solution is available in both left- and right-hand variants, for seamless integration into any production line.

Easy to use

- The **Mx350i-DW** is made user-friendly with its integrated UI and optional remote 10-inch touchscreen, ensuring easy operation.
- The robust design and clever functionality minimise the time required for media changes and maintenance, so you can maximise production uptime.

Easy to adapt

- The **Mx350i-DW** is built to endure, promising a long life, while its adaptability ensures it can meet your evolving labelling needs without requiring costly investments.
- The system is highly configurable and offers a multitude of options to further refine and simplify your labelling processes.

www.domino.se

Domino. Do more.

A complete solution for all labelling needs

Our services are designed to provide operational insight so you can reduce downtime and maximise production efficiency

Operational support

Our extended warranty packages provide high-quality, on-site assistance and augmented reality-enabled remote guidance from our engineers. **SafeGuard** helps to ensure we can be with you when you need us most.

Automatic code inspection

Ensure every code that leaves your factory is present and correct, and free up operator time. With **R-Series**, Domino's range of vision control systems, you can automate your code inspection to validate code presence, placement, and readability.

Central label management

Domino Automation easily integrates into your manufacturing process as well as your ERP/MES systems. It makes automatic changeovers safe and simple, helping you to reduce waste and drive sustainability initiatives while increasing productivity and efficiency.

Smart production

Gain operational insight by connecting your printer to **Domino Cloud**. Obtain production analytics dashboards and receive system error alerts. **Domino Cloud** provides you with the information you need to run your operations more efficiently.

Technical specification **Mx350i-DW**

Model	Mx350i-DW4	Mx350i-DW6
Print width	4-inch (108mm)	6-inch (162mm)
Print technology	Thermal transfer / Direct thermal	
Print resolution	12 dots/mm (300dpi)	
Printer variants	Left hand or Right hand	
Max print speed	400mm/s	250mm/s
Distance to product	0mm	
Product motion	Moving	
Apply method	Direct wipe	
Label position 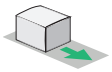		
Recommended label width	25-110mm	25-166mm
Recommended label length	30-300mm	
Label & ribbon roll length	Up to 600m	
Input voltage	90-250VAC 50/60Hz	
Communication	4x Ethernet, TCP/IP, 2x USB-A, 1x USB-B	
I/Os (configurable)	12 inputs and 12 outputs	

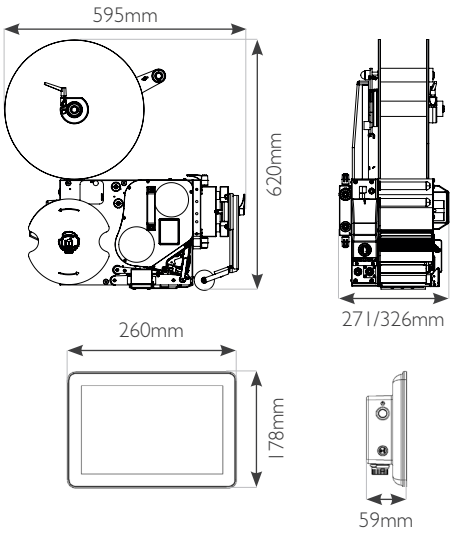

TALK TO AN EXPERT

+46 13 357 200
info@domino.se
www.domino.se

CONTACT US

All performance related figures and claims quoted in this document were obtained under specific conditions and may only be replicated under similar conditions.
For specific product details, you should contact your Domino Sales Advisor. This document does not form part of any terms and conditions between you and Domino.